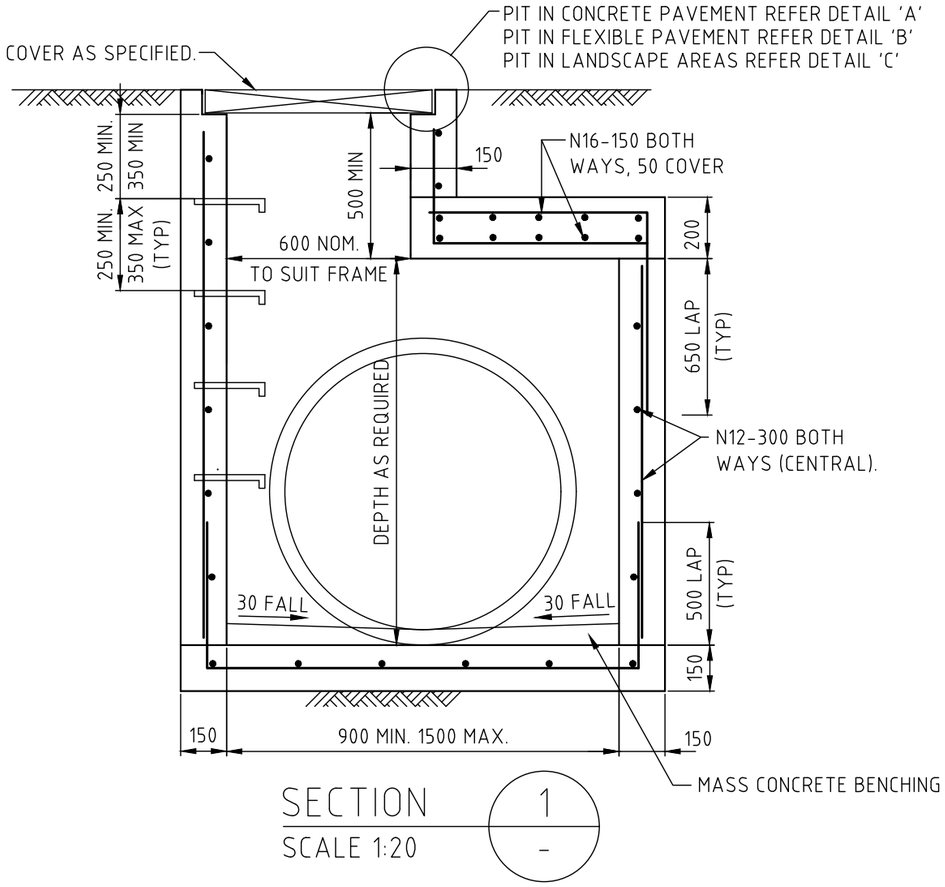

SECTION 1
SCALE 1:20

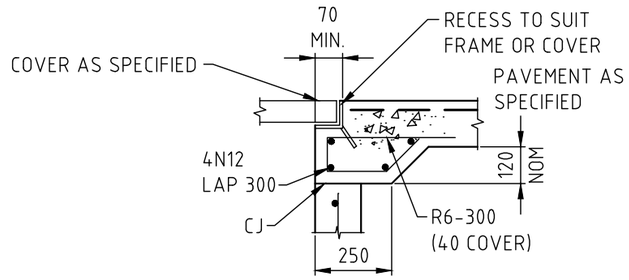

DETAIL 'A'
SCALE 1:20

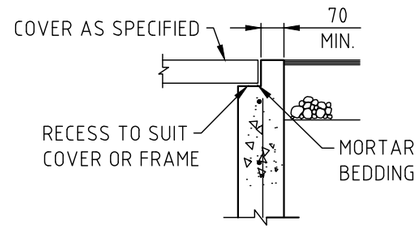

DETAIL 'B'
SCALE 1:20

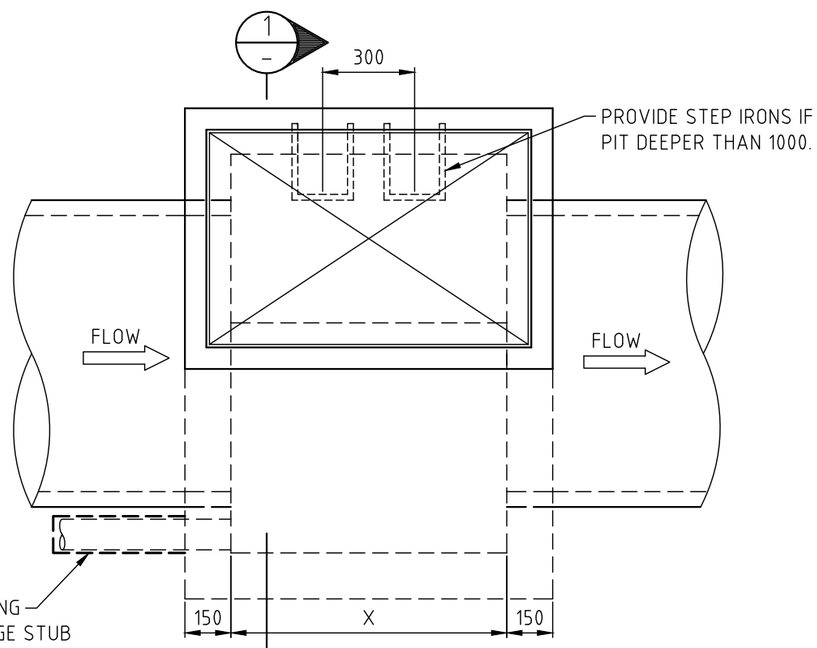

PLAN
SCALE 1:20

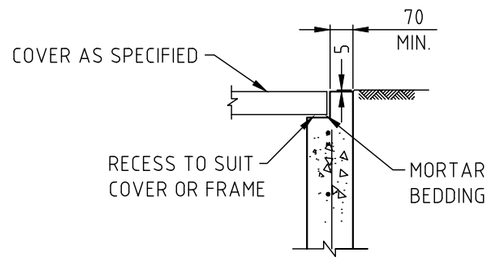

DETAIL 'C'
SCALE 1:20

REFER DRAWING SD201 FOR STORMWATER PIT NOTES

Mosman COUNCIL

JUNCTION PIT

0 0.5 0.8m
SCALE 1:20 @A3

REV. C
DATE: SEPT 2024

DRAWING No. SD205